US009100976B2

(12) **United States Patent**
Li et al.

(10) **Patent No.: US 9,100,976 B2**
(45) **Date of Patent: Aug. 4, 2015**

(54) **DEVICE-TO-DEVICE DISTRIBUTED SCHEDULING**

(71) Applicant: **Intel Corporation**, Santa Clara, CA (US)

(72) Inventors: **Honggang Li**, Beijing (CN); **Qinghua Li**, San Ramon, CA (US); **Huaning Niu**, Milpitas, CA (US); **Hujun Yin**, Saratoga, CA (US); **Yuan Zhu**, Beijing (CN)

(73) Assignee: **INTEL CORPORATION**, Santa Clara, CA (US)

(*) Notice: Subject to any disclaimer, the term of this patent is extended or adjusted under 35 U.S.C. 154(b) by 0 days.

(21) Appl. No.: **14/126,035**

(22) PCT Filed: **Sep. 27, 2013**

(86) PCT No.: **PCT/US2013/062277**

§ 371 (c)(1),
(2) Date: **Dec. 13, 2013**

(87) PCT Pub. No.: **WO2014/088687**

PCT Pub. Date: **Jun. 12, 2014**

(65) **Prior Publication Data**

US 2014/0169298 A1 Jun. 19, 2014

Related U.S. Application Data

(60) Provisional application No. 61/732,851, filed on Dec. 3, 2012.

(51) **Int. Cl.**

H04W 72/12	(2009.01)
H04W 24/10	(2009.01)
H04B 1/3827	(2015.01)
H04W 84/18	(2009.01)
H04W 92/18	(2009.01)
H04W 72/04	(2009.01)
H04L 5/00	(2006.01)

(52) **U.S. Cl.**
CPC ***H04W 72/12*** (2013.01); ***H04B 1/3827*** (2013.01); ***H04L 5/0055*** (2013.01); ***H04W 24/10*** (2013.01); ***H04W 72/048*** (2013.01); ***H04W 72/121*** (2013.01); ***H04W 72/1242*** (2013.01); ***H04W 72/1247*** (2013.01); ***H04W 84/18*** (2013.01); ***H04W 92/18*** (2013.01)

(58) **Field of Classification Search**
None
See application file for complete search history.

(56) **References Cited**

U.S. PATENT DOCUMENTS

8,694,662 B2 * 4/2014 Wu et al. 709/230
2007/0248114 A1 * 10/2007 Jia et al. 370/465

(Continued)

OTHER PUBLICATIONS

International Search Report and Written Opinion received for PCT Patent Application No. PCT/US2013/062277, mailed on Jan. 22, 2013, 12 Pages.

(Continued)

Primary Examiner — Jackie Zuniga Abad
Assistant Examiner — Justin T Van Roie
(74) *Attorney, Agent, or Firm* — Carrie A. Boone, P.C.

(57) **ABSTRACT**

A system and method for distributed scheduling of transmissions between device-to-device (D2D) communications is disclosed. The distributed scheduling method employs a distributed scheduling structure in which device identifiers rather than connection identifiers are used to enable scheduling of a D2D data transfer between devices in a wireless neighborhood. The novel distributed scheduling structure is scalable to a larger number of D2D devices than is feasible with a connection identifier-based tone matrix.

16 Claims, 15 Drawing Sheets

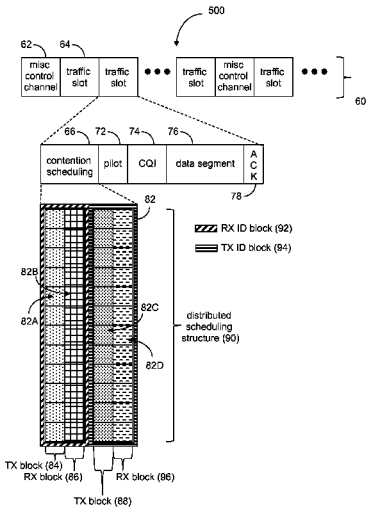

(56) **References Cited**

U.S. PATENT DOCUMENTS

2009/0135720	A1*	5/2009	Li et al.	370/232
2009/0232086	A1	9/2009	Li et al.	
2010/0118733	A1	5/2010	Wu et al.	
2010/0120372	A1	5/2010	Li et al.	
2012/0008570	A1	1/2012	Li et al.	

OTHER PUBLICATIONS

Wu, et al., "FlashLinQ: A Synchronous Distributed Scheduler for Peer-to-Peer Ad Hoc Networks", 48th Annual Allerton Conference on Communication, Control, and Computing, Sep. 29-Oct. 1, 2010, pp. 514-521.

* cited by examiner

Figure 1
(prior art)

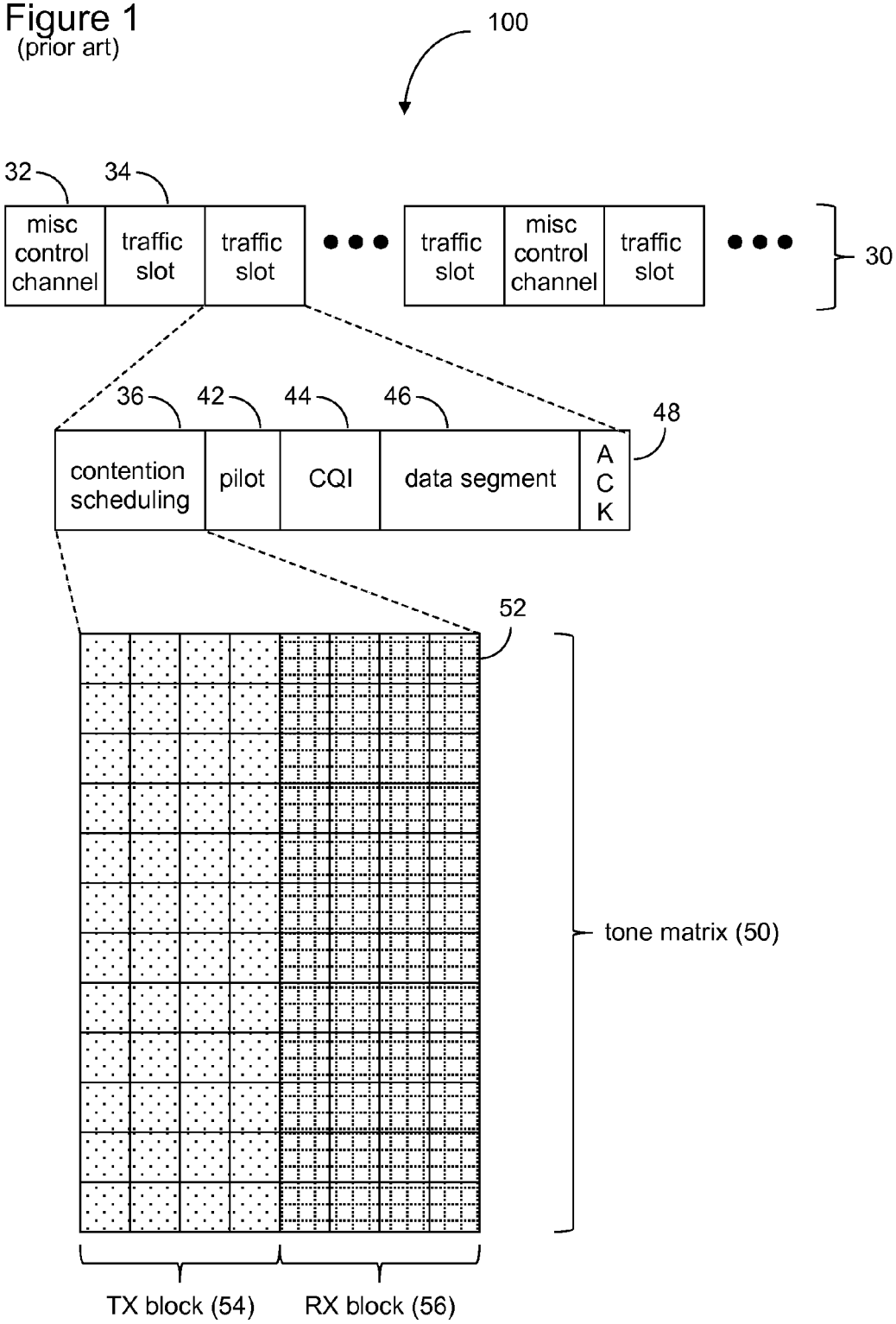

Figure 2
(prior art)

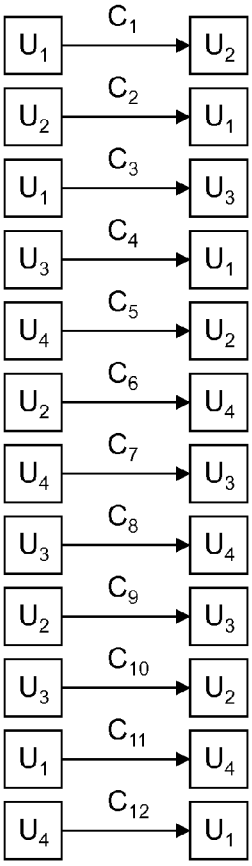

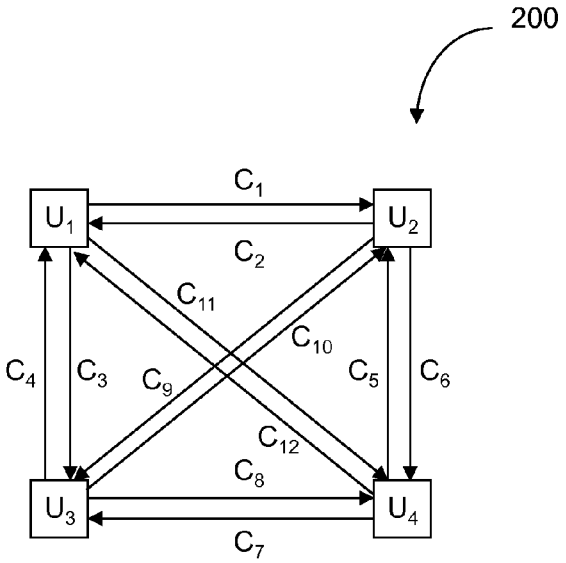

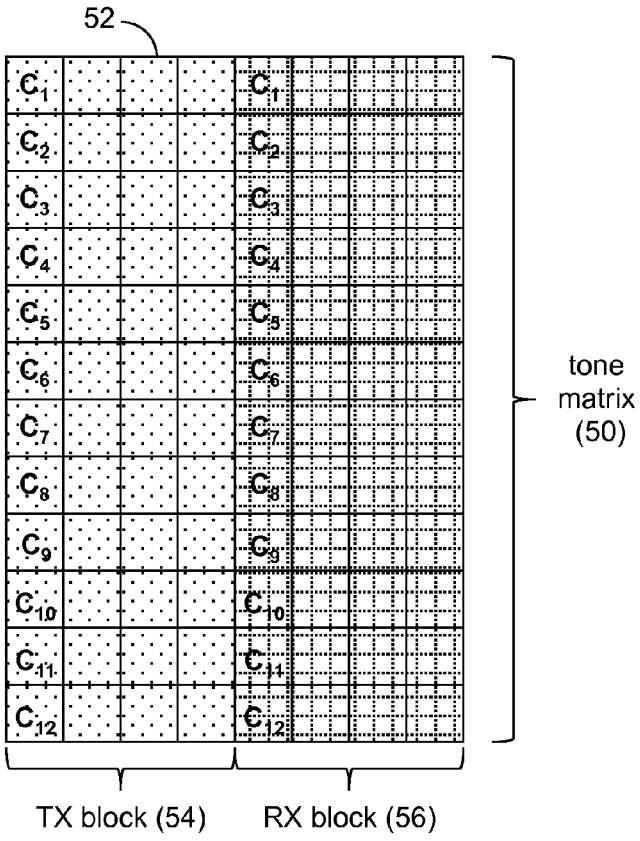

Figure 3
(prior art)

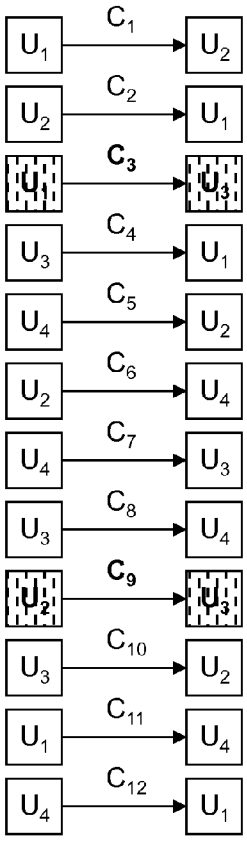

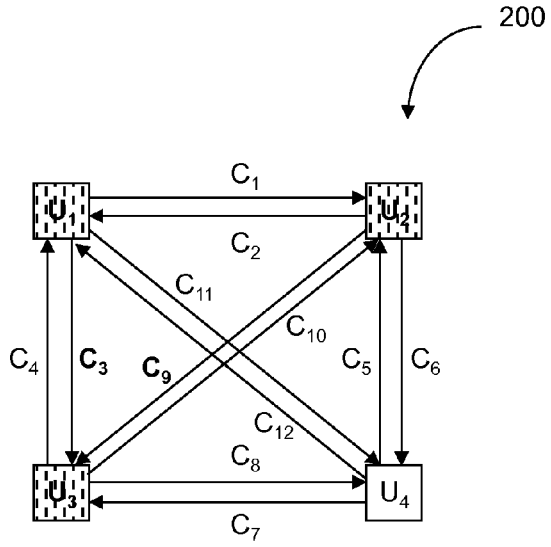

① U_1 & U_2 simultaneously request transmission to U_3

② U_3 accepts U_1 request, but ignores U_2 request

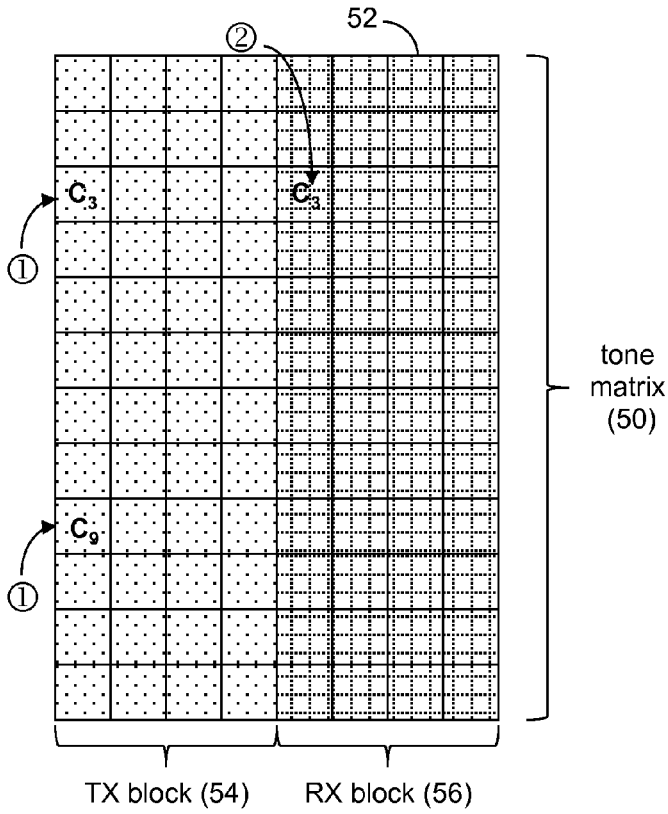

Figure 4
(prior art)

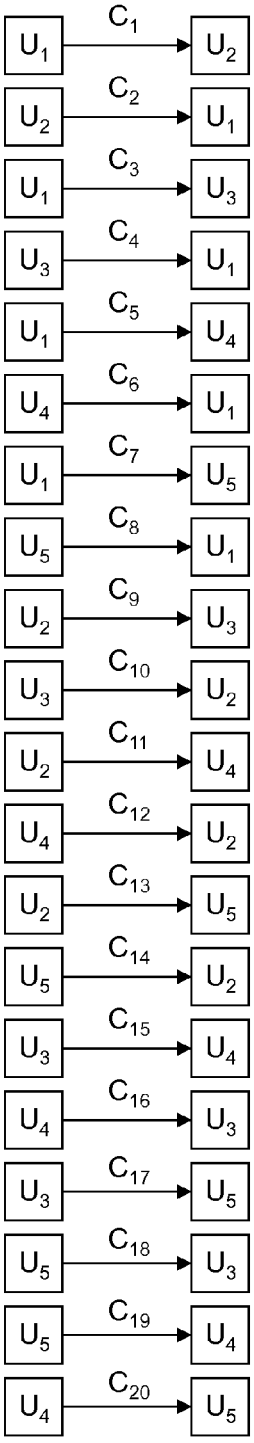

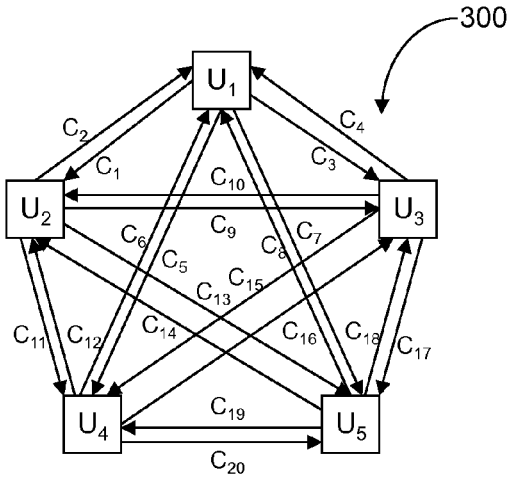

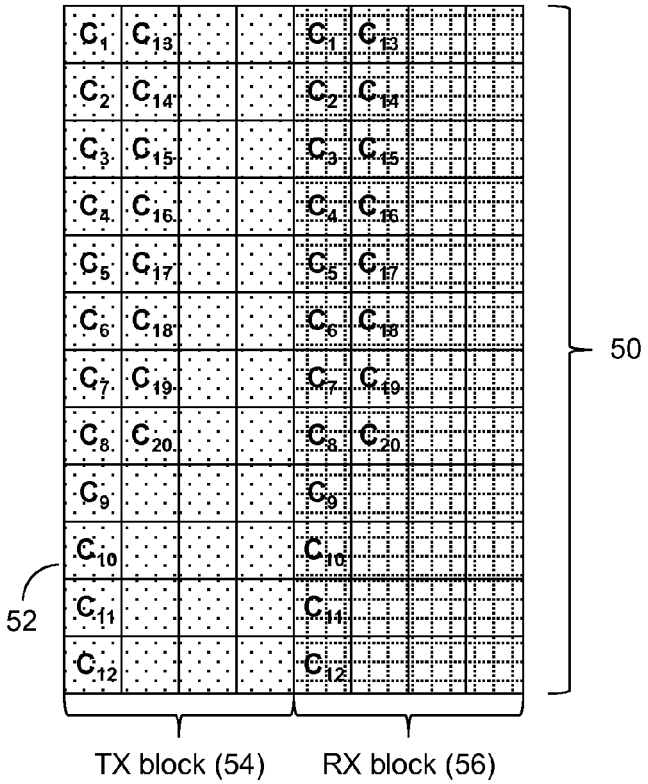

Figure 5
(prior art)

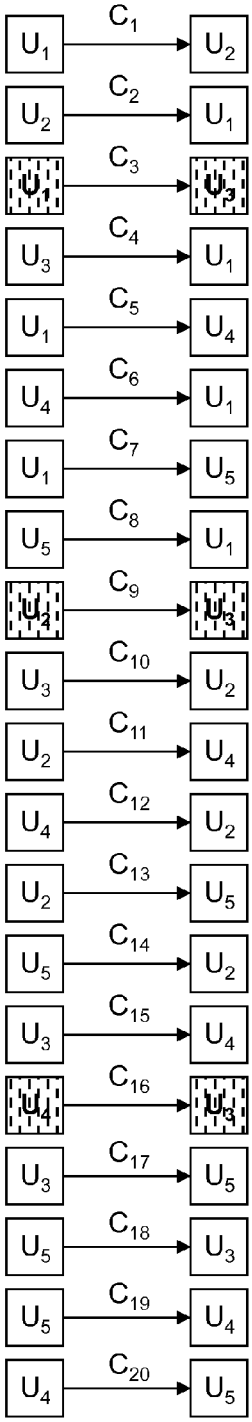

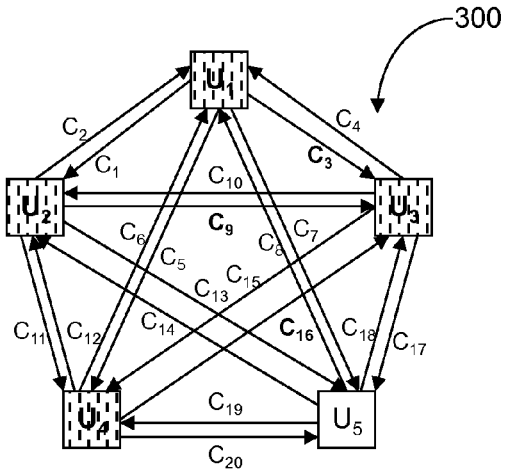

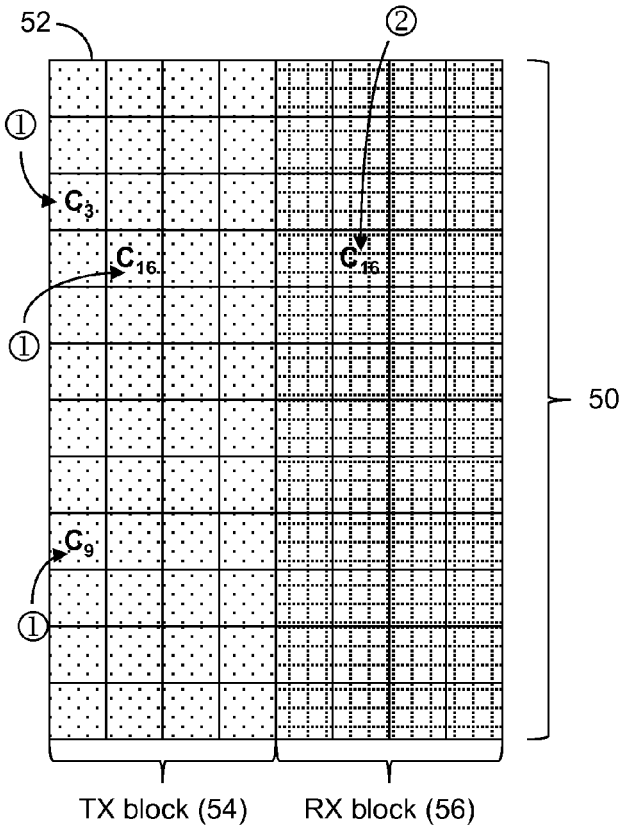

Figure 6A

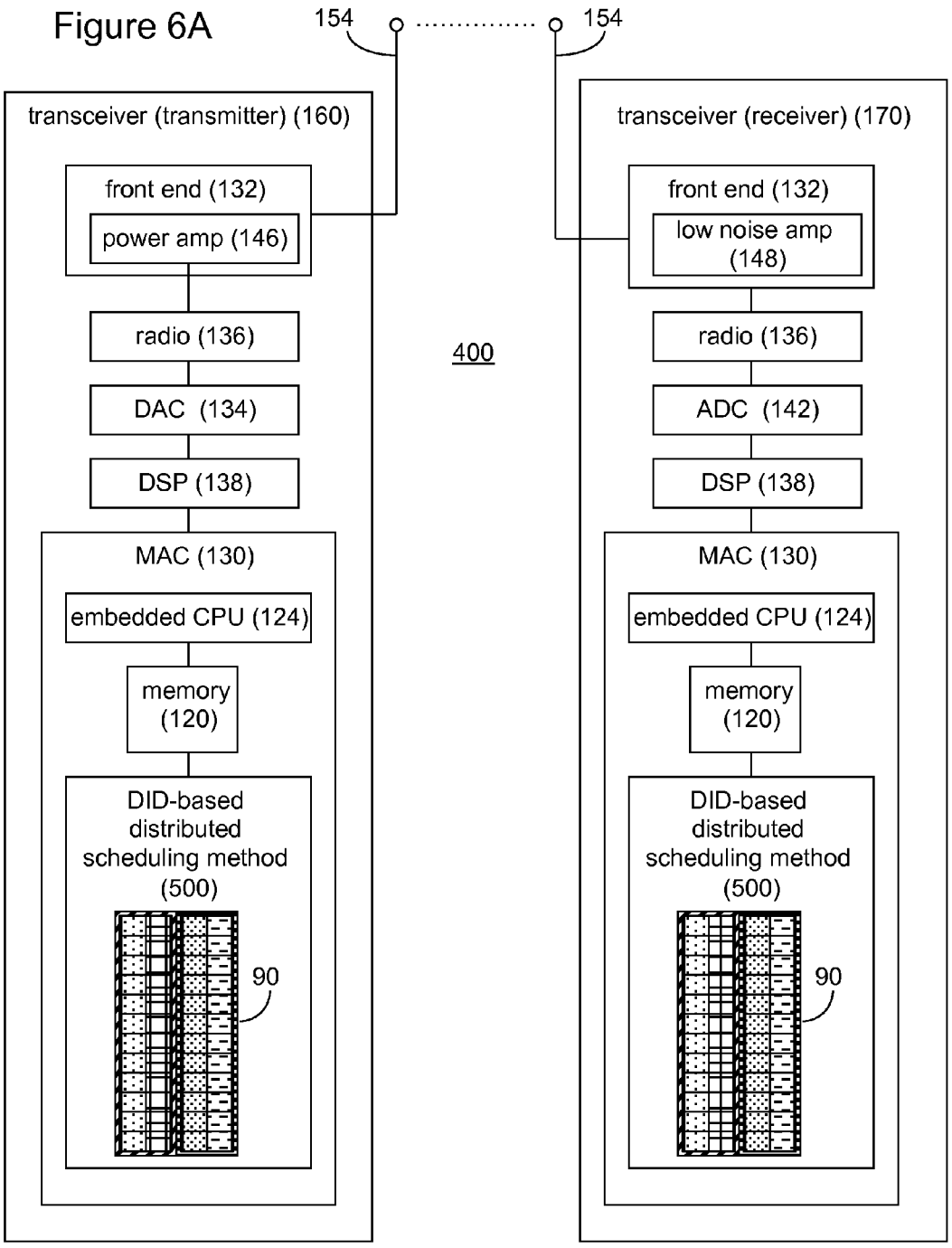
154
154
transceiver (transmitter) (160)
front end (132)
power amp (146)
radio (136)
DAC (134)
DSP (138)
MAC (130)
embedded CPU (124)
memory (120)
DID-based distributed scheduling method (500)
90
400
transceiver (receiver) (170)
front end (132)
low noise amp (148)
radio (136)
ADC (142)
DSP (138)
MAC (130)
embedded CPU (124)
memory (120)
DID-based distributed scheduling method (500)
90

Figure 6B

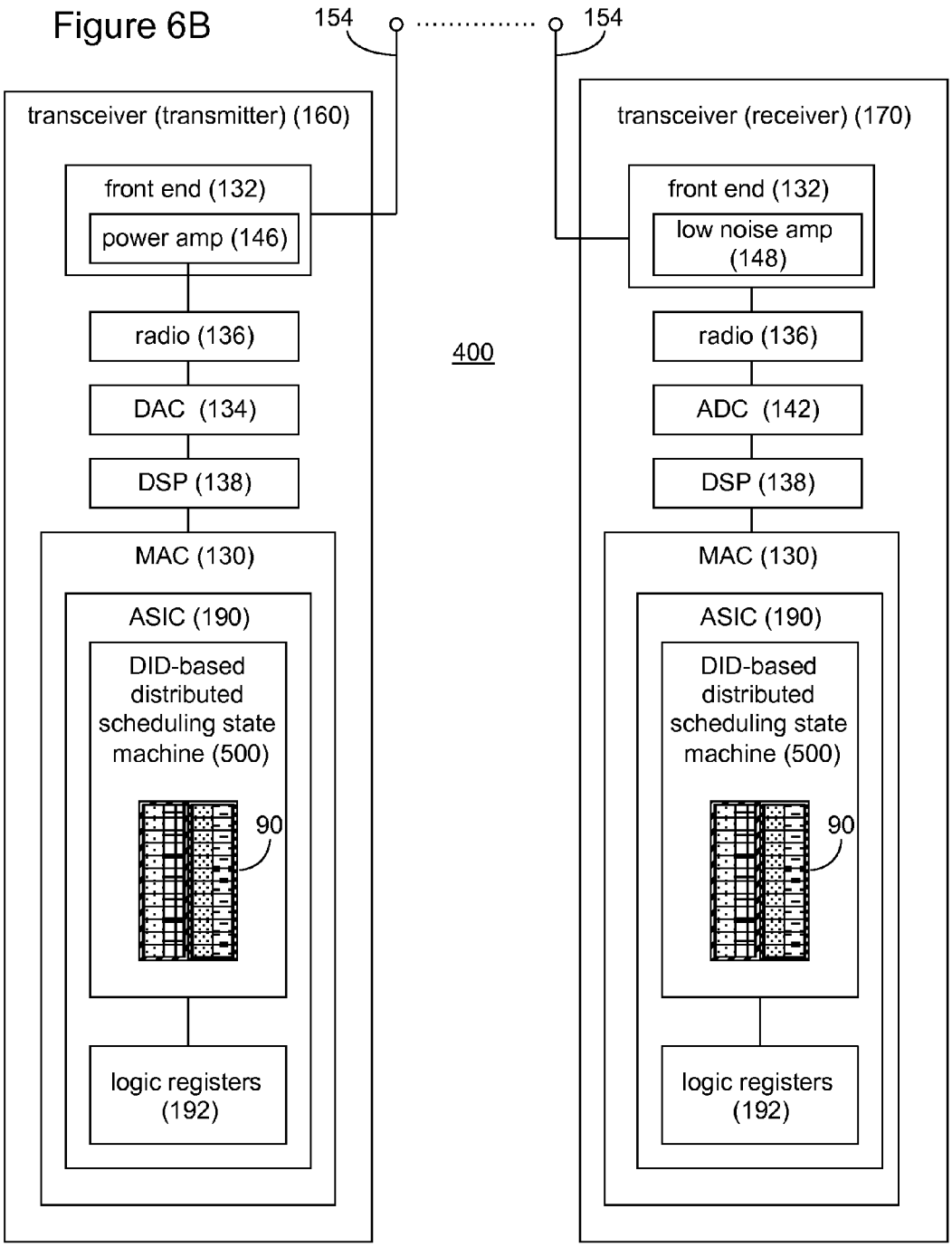
154
154
transceiver (transmitter) (160)
front end (132)
power amp (146)
radio (136)
DAC (134)
DSP (138)
MAC (130)
ASIC (190)
DID-based distributed scheduling state machine (500)
90
logic registers (192)
400
transceiver (receiver) (170)
front end (132)
low noise amp (148)
radio (136)
ADC (142)
DSP (138)
MAC (130)
ASIC (190)
DID-based distributed scheduling state machine (500)
90
logic registers (192)

Figure 7

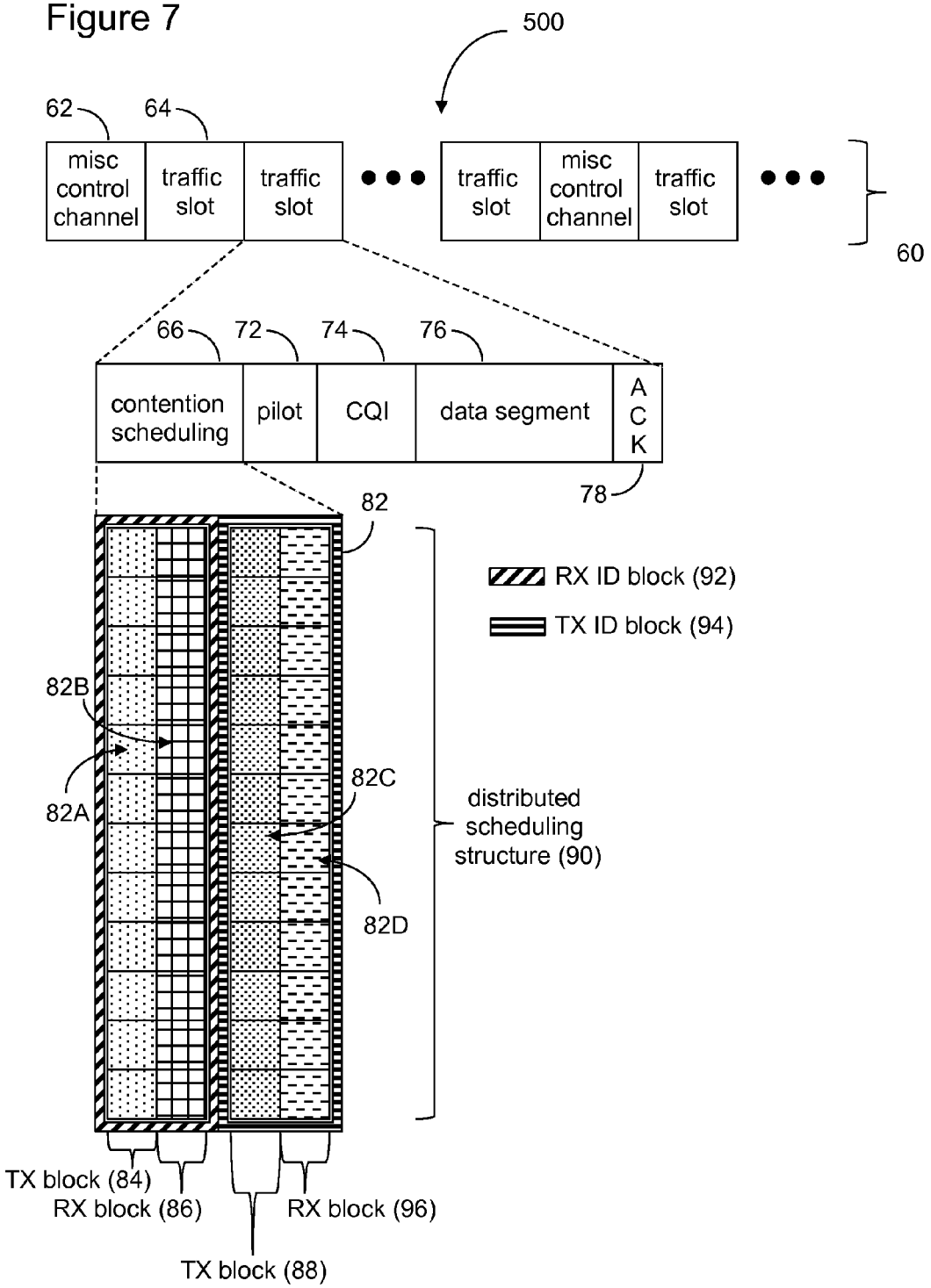
500
62
64
misc control channel
traffic slot
traffic slot
traffic slot
misc control channel
traffic slot
60
66
72
74
76
contention scheduling
pilot
CQI
data segment
A C K
78
82
RX ID block (92)
TX ID block (94)
82B
82A
82C
82D
distributed scheduling structure (90)
TX block (84)
RX block (86)
RX block (96)
TX block (88)

Figure 8

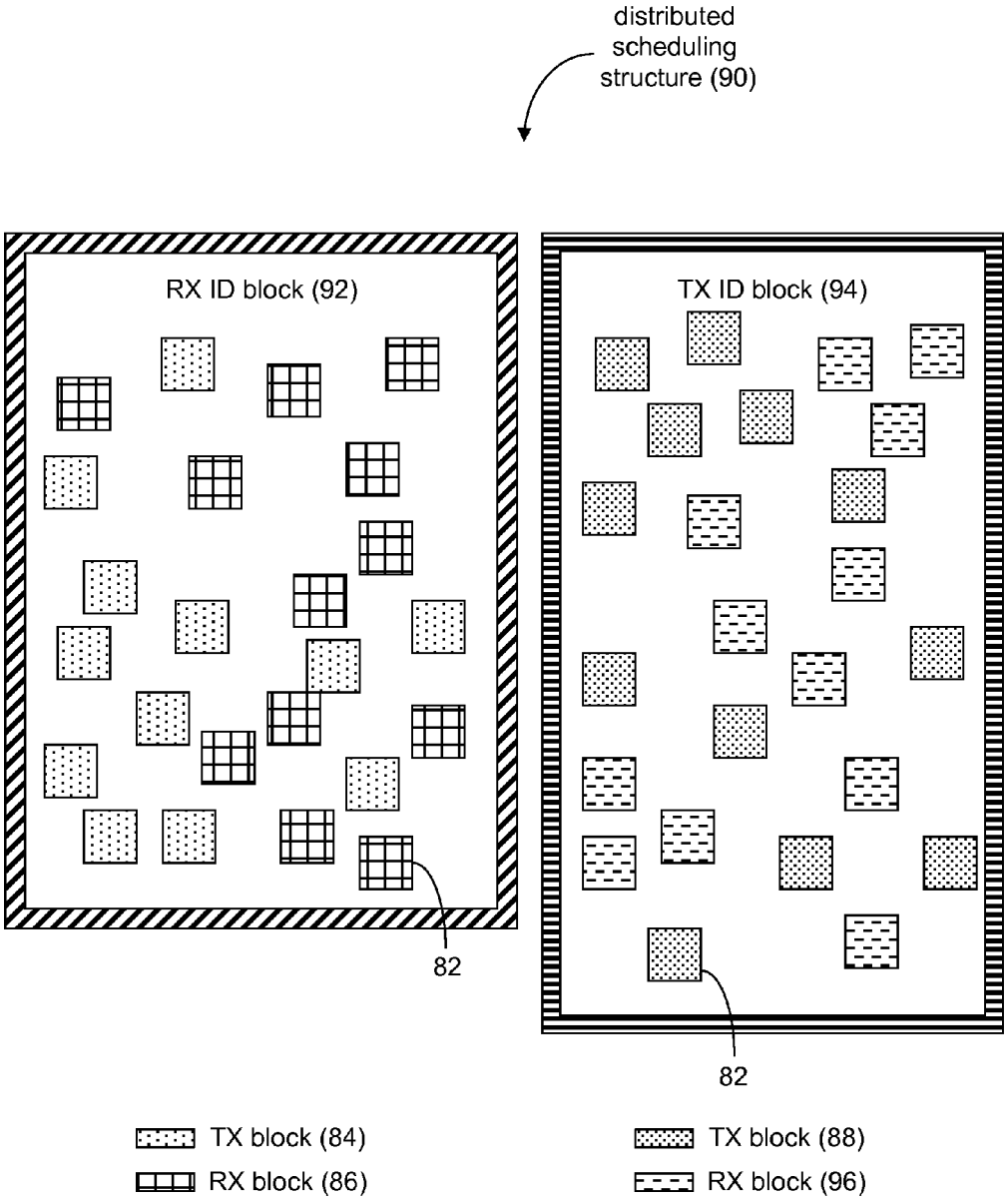
distributed scheduling structure (90)
RX ID block (92)
TX ID block (94)
82
82
TX block (84)
RX block (86)
TX block (88)
RX block (96)

Figure 9

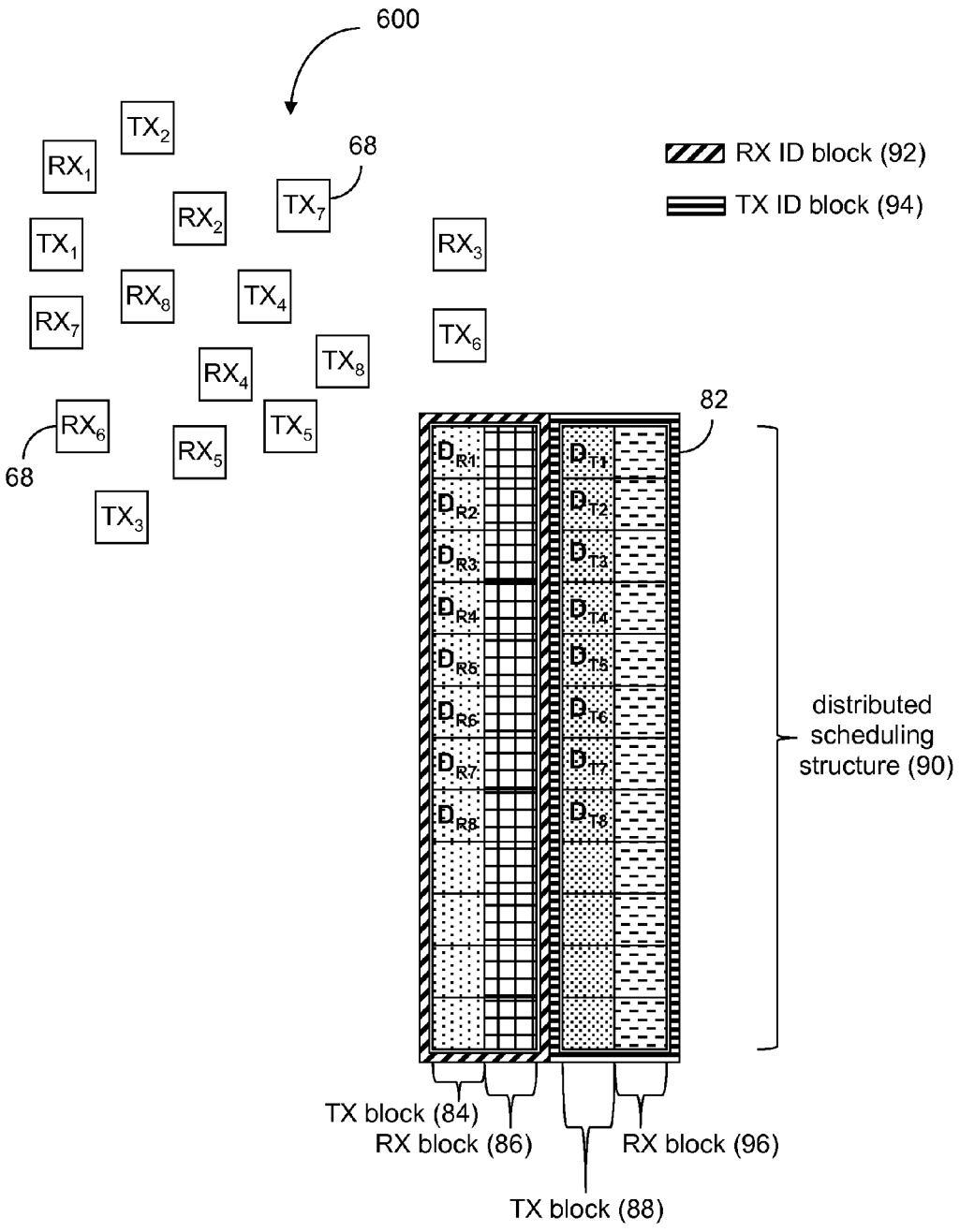
600
68
68
82
RX ID block (92)
TX ID block (94)
distributed scheduling structure (90)
TX block (84)
RX block (86)
TX block (88)
RX block (96)

Figure 10

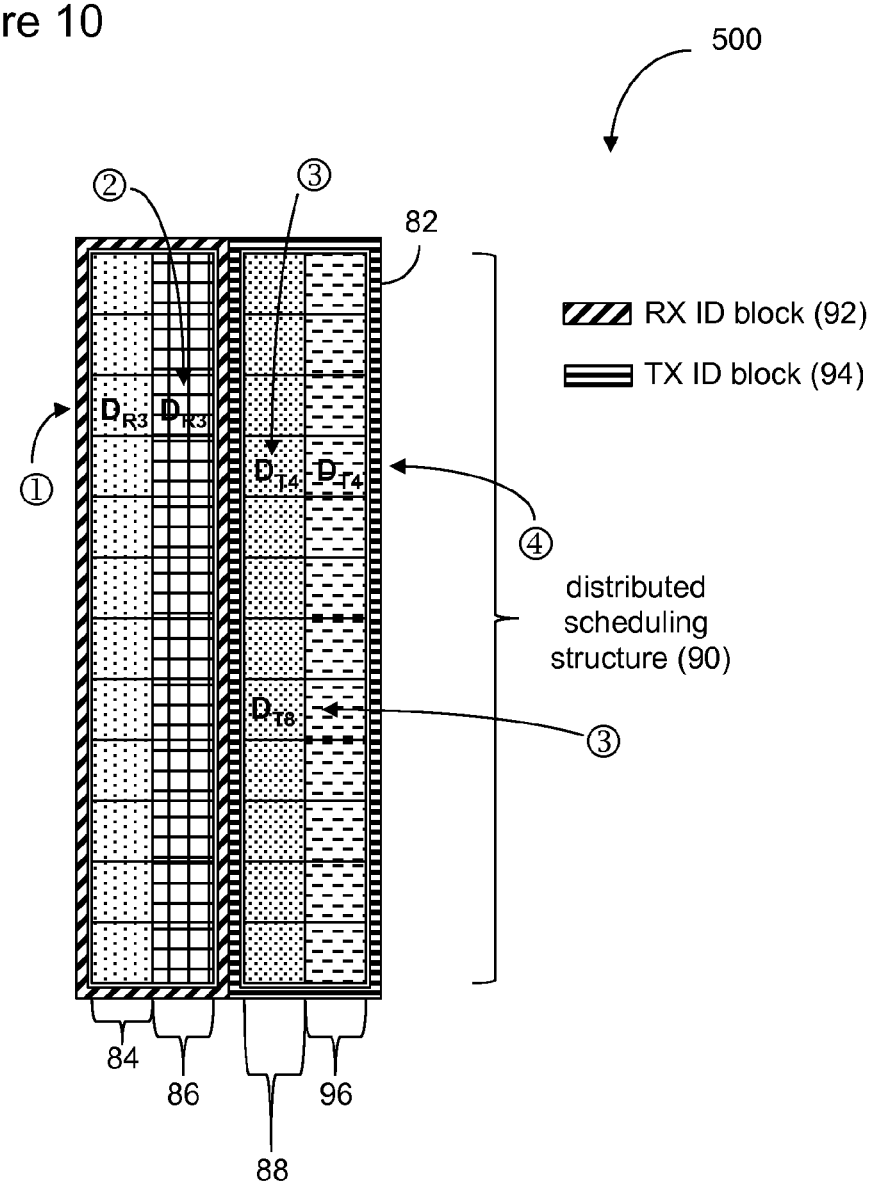

① TX_4 and TX_8 request connection to RX_3

② RX_3 acknowledges being available

③ TX_4 and TX_8 identify selves as connection requestors

④ RX_3 selects TX_4 for connection and data transmission

Figure 11A

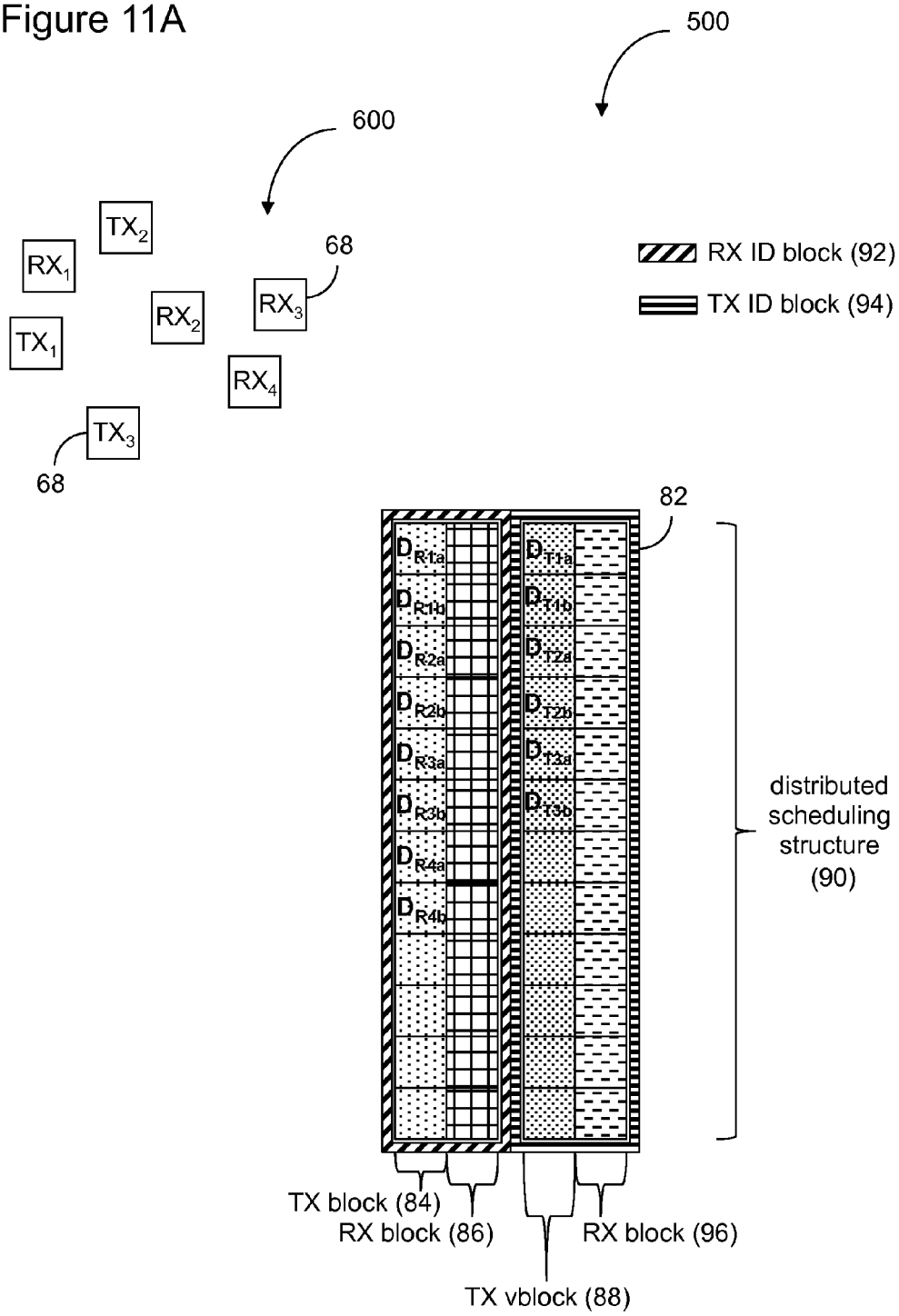
500
600
TX2
RX1
68
RX3
RX2
TX1
RX4
TX3
68
RX ID block (92)
TX ID block (94)
82
DR1a
DR1b
DR2a
DR2b
DR3a
DR3b
DR4a
DR4b
DT1a
DT1b
DT2a
DT2b
DT3a
DT3b
distributed scheduling structure (90)
TX block (84)
RX block (86)
RX block (96)
TX vblock (88)

Figure 11B

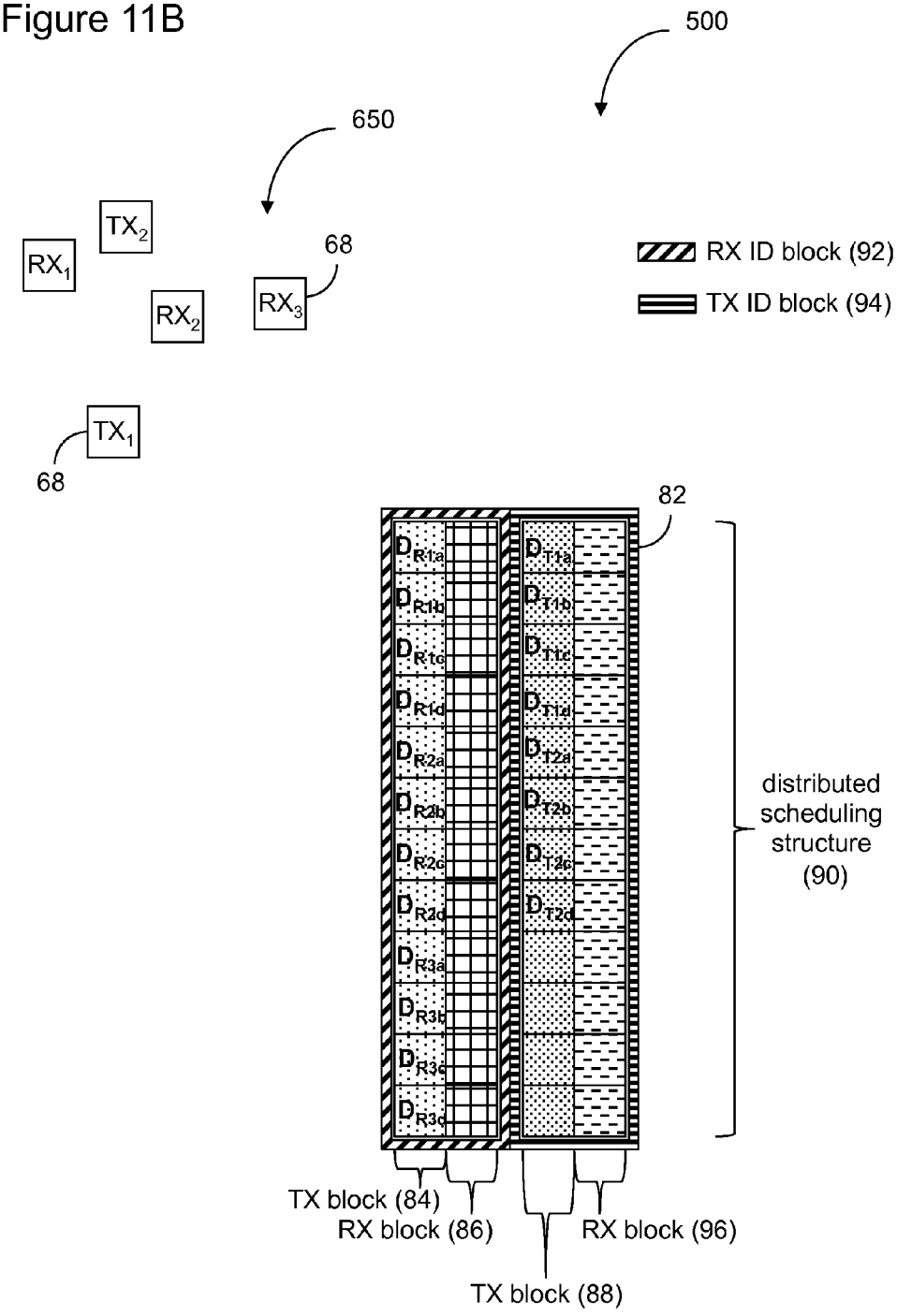
500
650
TX2
RX1
RX2
RX3
68
68
TX1
RX ID block (92)
TX ID block (94)
82
DR1a
DR1b
DR1c
DR1d
DR2a
DR2b
DR2c
DR2d
DR3a
DR3b
DR3c
DR3d
DT1a
DT1b
DT1c
DT1d
DT2a
DT2b
DT2c
DT2d
distributed scheduling structure (90)
TX block (84)
RX block (86)
TX block (88)
RX block (96)

Figure 12

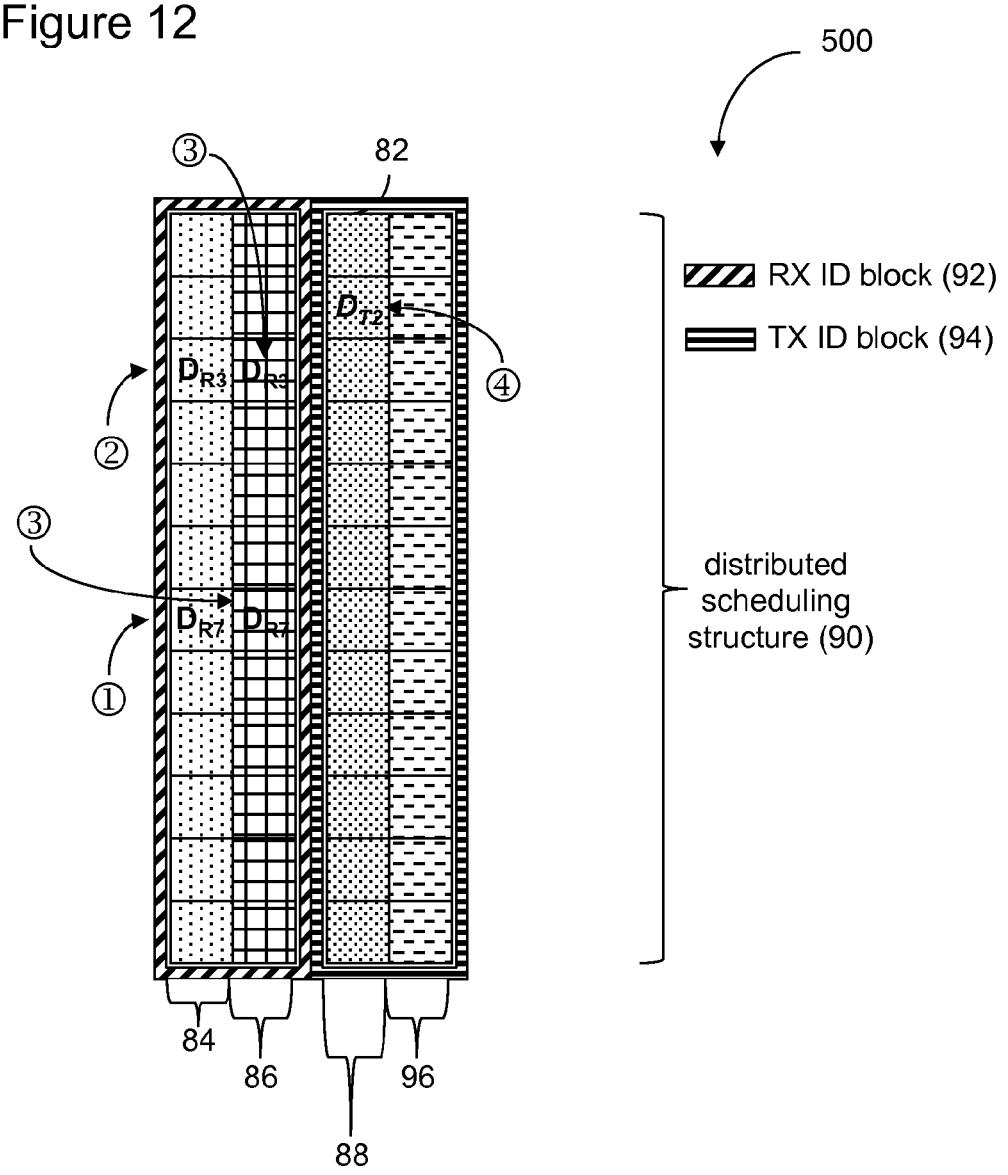

① TX_2 requests connection to RX_7

② another transmitter unknown to transmitter TX_2 requests connection to RX_3,

③ RX_3 and RX_7 acknowledge that they are available; received power from RX_3 and RX_7 is strong

④ TX_2 compares priority of RX_3 and RX_7, quits

Figure 13

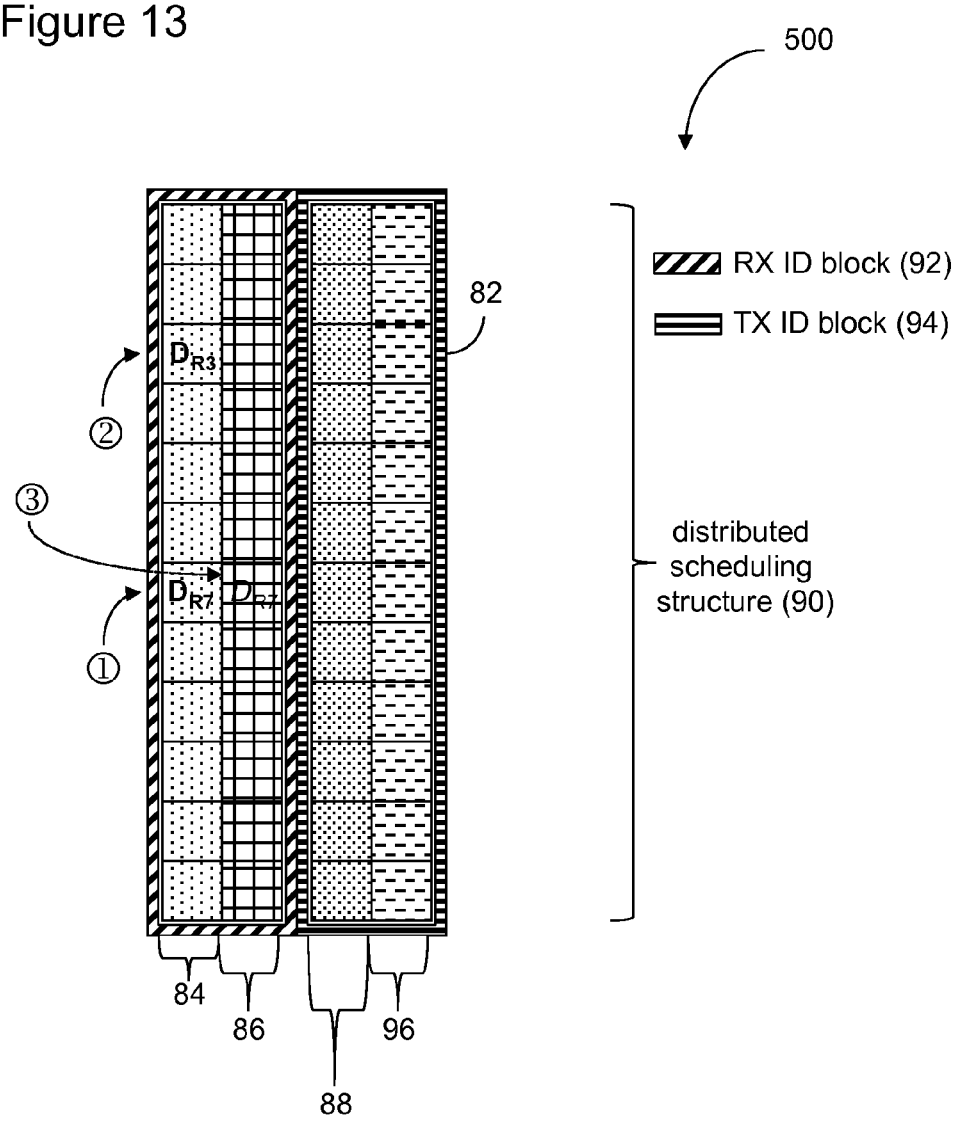

① TX_2 requests connection to RX_7

② another transmitter unknown to transmitter TX_2 requests connection to RX_3,

③ RX_7 compares the priorities of itself and RX_3 and does not respond

DEVICE-TO-DEVICE DISTRIBUTED SCHEDULING

CROSS-REFERENCE TO RELATED APPLICATIONS

This application is a continuation of PCT Patent Application No. PCT/US2013/062277, filed on Sep. 27, 2013, which claims the benefit of U.S. Provisional Patent Application No. 61/732,851 filed on Dec. 3, 2012.

TECHNICAL FIELD

This application relates to distributed scheduling for device-to-device transmissions under 3GPP LTE.

BACKGROUND

Device-to-device (D2D) communications are supported under 3GPP LTE (short for third-generation partnership project—long-term evolution), and companies are developing methods for distributed scheduling operations between the devices.

Distributed scheduling in D2D communications is a channel allocation mechanism where channel request and allocation are done, not by a central device, but by a pair of transmitter and receiver devices themselves. With this mechanism, multiple pairs of devices can share the channel resources. One prior art solution employs tone matrix-based distributed scheduling. The proposed solution, however, does not scale well with the number of transmitters and receivers in the transmission space.

Thus, there is a continuing need for a tone matrix-based D2D scheduling mechanism that overcomes the shortcomings of the prior art.

BRIEF DESCRIPTION OF THE DRAWINGS

The foregoing aspects and many of the attendant advantages of this document will become more readily appreciated as the same becomes better understood by reference to the following detailed description, when taken in conjunction with the accompanying drawings, wherein like reference numerals refer to like parts throughout the various views, unless otherwise specified.

FIG. **1** is a block diagram of a tone matrix used in distributed scheduling operations under D2D, according to some embodiments;

FIG. **2** is a diagram showing transmitter-receiver pairs and connection IDs for a wireless neighborhood having two transmitters and two receivers, according to some embodiments;

FIG. **3** is a diagram showing how the tone matrix is used for distributed scheduling in the wireless neighborhood of FIG. **2**, according to some embodiments;

FIG. **4** is a diagram showing transmitter-receiver pairs and connection IDs for a wireless neighborhood having three transmitters and three receivers, according to some embodiments;

FIG. **5** is a diagram showing how the tone matrix is used for distributed scheduling in the wireless neighborhood of FIG. **4**, according to some embodiments;

FIGS. **6**A and **6**B are block diagrams of two transceivers employing the device ID-based distributed scheduling method for D2D transmissions using a novel distributed scheduling structure, according to some embodiments;

FIG. **7** is a block diagram of the novel distributed scheduling structure used by the device ID-based distributed scheduling method of FIGS. **6**A or **6**B, according to some embodiments;

FIG. **8** is a block diagram of the novel distributed scheduling structure of FIG. **7** shown in a more amorphous orientation, to illustrate that the structure is distributed in time and frequency, according to some embodiments;

FIG. **9** is a diagram showing a possible distribution of device identifiers in the novel distributed scheduling structure, according to some embodiments;

FIG. **10** is a diagram showing how the novel distributed scheduling structure is used for distributed scheduling between D2D devices without using connection IDs, according to some embodiments;

FIGS. **11**A and **11**B are diagrams showing two- and four-tone DID solutions, respectively used by the device ID-based distributed scheduling method of FIG. **7**, according to some embodiments;

FIG. **12** is a second diagram showing how the novel distributed scheduling structure is used for distributed scheduling between D2D devices without using connection IDs, according to some embodiments; and

FIG. **13** is a third diagram showing how the novel distributed scheduling structure is used for distributed scheduling between D2D devices without using connection IDs, according to some embodiments.

DETAILED DESCRIPTION

In accordance with the embodiments described herein, a system and method for distributed scheduling of transmissions between D2D devices is disclosed. The distributed scheduling method employs a novel distributed scheduling structure in which device IDs rather than connection IDs are used to enable scheduling of a D2D data transfer between devices in a wireless neighborhood. The distributed scheduling structure includes tones that are distributed in frequency and time physically. The novel distributed scheduling structure is scalable to a larger number of D2D devices than is feasible with a connection ID-based tone matrix.

In the following detailed description, reference is made to the accompanying drawings, which show by way of illustration specific embodiments in which the subject matter described herein may be practiced. However, it is to be understood that other embodiments will become apparent to those of ordinary skill in the art upon reading this disclosure. The following detailed description is, therefore, not to be construed in a limiting sense, as the scope of the subject matter is defined by the claims.

FIG. **1** is a block diagram of a connection identifier-based (CID-based) distributed scheduling D2D method **100**. A data stream **30** is made up of both miscellaneous control channels **32** and traffic slots **34**. Each traffic slot **34** is made up of the following fields: contention scheduling **36**, pilot **42**, channel quality indicator (CQI) **44**, data segment **46**, and acknowledgement **48**.

Each traffic slot **34** includes a contention scheduling header **36** made up of a transmit (TX) block **54** and a receive (RX) block **56**. Together, the TX block **54** and the RX block **56** are known as a tone matrix **50**. The tone matrix **50** enables a potential transmitter in a wireless neighborhood to contend for a data segment **46** in the traffic slot **34**, thus allowing D2D communication with a receiver also in the wireless neighborhood.

The tone matrix **50** is made up of individual tones **52**. The tones **52** are enabled or disabled (ON or OFF), which enable

communication between transmitter-receiver pairs. The TX block **54** of the tone matrix **50** is depicted as a 12×4 grid of polka-dotted tones **52** while the RX block **56** of the tone matrix is depicted as a 12×4 grid of checkerboard tones. The tones **52** occupy both the TX block **54** and the RX block **56**. The tone matrix **50** may be larger or smaller, depending on the number of connections between devices in the wireless neighborhood.

FIG. **2** is a block diagram showing a wireless neighborhood **200** consisting of four users. Each user is likely a transceiver, with both a transmit function and a receive function. Connection identifiers (CIDs), denoted C_1-C_{12}, are shown for each possible user pairing, with each CID being assigned to a unidirectional connection between two users. Thus, a connection between user U_1 and user U_2 is assigned a CID of C_1; a connection between user U_2 and user U_1 is assigned a CID of C_2. The CIDs are arbitrary, with the only requirement being that each connection between two users has a unique CID. As FIG. **2** illustrates, twelve connections are possible with four users.

Each pair of users is assigned a unique CID and allocated a tone-pair, one in the TX block **54** and one in the RX block **56**. A tone pair is simply a tone **52** located in the TX block **54** and an analogous tone (same row, same column) in the RX block **56**. When a tone or "1" or ON value is placed in either or both of the tones **52** making up that tone pair, the CID assigned to that tone pair, and thus the connected users, is referenced. In other words, a particular tone pair (e.g., tone in TX block and analogous tone in RX block) in the tone matrix **50** is mapped to a particular CID. Thus, when a transmitter "sends a signal on the tone" of the TX block **54**, this essentially means that the transmitter is enabling one of the tones **52** in the tone matrix **50**, with the tone having previously been associated with a distinct CID. The receiver that is part of the connection having the CID is thus notified of the signaling by the transmitter. Similarly, when the receiver "sends a signal on the tone" of the RX block **56**, the receiver is likewise essentially enabling one of the tones **52** in the RX block **56** of the tone matrix **50**, thus notifying the transmitter that is part of the connection. In this manner, the transmitters and receivers making up the wireless neighborhood have a mechanism, the tone matrix **50**, with which to communicate with one another.

In FIG. **2**, the first twelve tones **52** of the TX block **54** are allocated to the twelve connections denoted by CIDs C_1-C_{12} of the wireless neighborhood **200**. Similarly, the first twelve tones of the RX block **56** are allocated to the twelve connections denoted by CIDs C_1-C_{12} of the wireless neighborhood **200**. So, for just four users, there are twelve tone pairs representing twelve CIDs, C_1-C_{12}, for a total of twenty-four tones **52** being allocated in the tone matrix **50**.

In the drawings, the CIDs are allocated in numerical order for ease of presentation. However, other tones **52** of the TX block **54** and RX block **56** may be assigned the CIDs. The assignments need not be consecutive or necessarily adjacent to one another, for example. Further, the CIDs may be assigned to a tone pair as the connections are made or according to some other criteria, and are not necessarily presented in numerical order. Nevertheless, if the first tone **52** of the TX block **54** is allocated to a particular CID (in this case, C_1), then the first tone **52** of the RX block **56** is allocated that same CID, with C_1 referring to a unidirectional connection from U_1 to U_2. In the tone matrix **50**, up to **48** connections may be allocated a tone pair.

If the transmitter has data to send, the transmitter will send a signal on the tone **52** of the TX block **54** as a request. Subsequently, to acknowledge the request, the receiver sends a signal on the analogous tone of RX block **56**, with the tone and the analogous tone making up the tone pair. Upon receiving the acknowledgement, both users making up the connection referenced by the CID, the transmitter and the receiver, have become mutually aware of the pending transaction. Thus, the transmitter is able to send data in the data segment **46**, knowing that the receiver will retrieve the data.

FIG. **3** shows one scenario for using the tone matrix **50** to perform distributed scheduling. In this example, both U_1 and U_2 want to send data to U_3. The users in this scenario, U_1, U_2, and U_3, are illustrated in vertical dashes. First, user U_1 and user U_2 simultaneously request user U_3 by each sending a signal on the tone **52** of the TX block **54** (where the relevant CID is located according to the CID assignments of FIG. **2**, with C_1 occupying the first row, first column tone pair, C_2 occupying the second row, first column tone pair, and so on). For U_1 to U_3, the CID is C_3 and the CID position is the third tone **52** in the first column of the TX block **54** of the tone matrix **50**; for U_2 to U_3, the CID is C_9 and the CID position is the ninth tone **52** in the first column of the TX block **54** of the tone matrix.

In this case, multiple users, U_1 and U_2, have data to send to a third user, U_3. To resolve this, a different priority can be assigned to each tone **52**, such that the CID that occupies a higher-priority tone is preferred over a CID with a lower priority. The mapping of the CIDs in the tones **52** within the tone matrix **50** can be randomized, slot-by-slot, to guarantee the fairness among users. In FIG. **3**, the user, U_3 accepts the user U_1 request by sending a signal on the RX block **56** corresponding to CID C_3, while the user U_2 request is ignored. In this manner, the transmission request of user U_1 is serviced and the user U_3 knows to subsequently retrieve the data. User U_2's transmission request will have to be serviced at a later time.

The TX block **54** and the RX block **56** of the tone matrix **50** thus provide a mechanism in which connected transmitter-receiver pairs can handshake with one another to initiate data transmission. Simply, the transmitter(s) wanting to transmit data let the desired receiver know by turning on the relevant tone **52** in the TX block **54** associated with the desired CID, and the receiver accepts the transmission request for one of the requesting transmitters by turning on the analogous tone in the RX block **56** of the CID.

Because the above scheme is CID-based, each tone **52** of the tone matrix **50** is available to be mapped to a CID. As the number, N, of D2D devices increases, the size of the tone matrix **50** increases, as the square of N, or N^2, so as to allow direct communication between any two devices. Namely, N^2 tones in both the TX block **54** and the RX block **56** are required. Thus, supporting a D2D group having more than about thirty users, e.g., about the size of a classroom, becomes problematic.

FIG. **4**, for example, illustrates the scaling problem. Here, a wireless neighborhood **300** features five users, U**1**, U**2**, U**3**, U**4**, and U**5**. Twenty possible unidirectional connections are possible and thus twenty possible CIDs are established, denoted C_1-C_{20}. If each connection is associated with a tone pair consisting of a tone **52** of the TX block **54** and an analogous tone of the RX block **56**, a total of 40 tones **52** (20 tone-pairs) are allocated within the tone matrix **50**, to service merely five users.

As N grows, so does the size of the tone matrix **50**. In some embodiments, the number of tone pairs is given by the following formula:

$$\#\text{ of tone pairs} = 2*N*(N-1) \quad (1)$$

Thus, where there are four users (FIGS. **2** and **3**), N=4, the number of tones **52** needed to support distributed scheduling

under D2D is 24 (twelve tone pairs). Where there are five users (FIGS. **4** and **5**), N=5, the number of tones **52** needed for distributed scheduling under D2D is 40 (20 tone pairs). Where there are eight users, N=8, the number of tones **52** needed for distributed scheduling is 112 (56 tone pairs). Thus, for values of N greater than seven, the size of the tone matrix **50**, which has but 48 tone pairs, would need to grow.

FIG. **5** shows a scenario for using the tone matrix **50** to peform distributed scheduling between three users, U_1, U_2, and U_4, each of which want to communicate with user U_3. Again, the users are illustrated in vertical dashes. First, user U_1, user U_2, and user U_4, simultaneously request the user, U_3 by each sending a signal on the TX block **54** where the relevant CID is (in this example, the CID assignments of FIG. **4** are assumed). For U_1 to U_3, the CID is C_3 and the CID position is the third block **52** of the TX block **54** of the tone matrix **50**; for U_2 to U_3, the CID is C_9 and the CID position is the ninth block **52** of the TX block of the tone matrix; for U_4 to U_3, the CID is C_{16} and the CID position is the sixteenth block **52** of the TX block of the tone matrix.

After the users (transmitters) have populated the TX block **54** with the relevant CIDs, the user (receiver) U_3 decides which of the three requests to honor. In this case, by sending a signal on the tone **52** where the CID C_{16} is located, the user U_3 selects the user U_4. The selection of one user over another may be based on some selection criteria, whether by a priority scheme, or a randomized one. In FIG. **5**, the user U_3 (receiver) accepts the user U_4 (transmitter) request by sending a signal on the tone **52** of the RX block **56** corresponding to CID C_{16}, while the U_1 and U_2 transmitter requests are ignored.

Contrasting the wireless neighborhoods **200** (FIGS. **2** and **3**) and **300** (FIGS. **4** and **5**), it is easy to understand that the tone matrix **50** will quickly run out of tones **52** to assign to CIDs if the number of users increases. For D2D transmissions between thirty transmitter-receiver pairs, for example, the tone matrix becomes unwieldy.

FIG. **6**A is a simplified block diagram of a wireless neighborhood **400** having two transceivers **160**, **170**, where the two transceivers employ a device ID-based distributed scheduling method **500**, according to some embodiments. In this example, the first transceiver **160** operates as a transmitter and the second transceiver **170** operates as a receiver.

Each transceiver includes an antenna **154**, a front-end **132**, a radio **136**, a baseband digital signal processor (DSP) **138**, and a medium access controller (MAC) **130**. The transmitter **160** includes a power amplifier **146** in its front-end **132** while the receiver **170** includes a low noise amplifier **148** in its front-end. The transmitter **160** includes a digital-to-analog converter (DAC) **134** while the receiver **170** includes an analog-to-digital converter (ADC) **142**. The transceivers **160** and **170** may be virtually any wireless device, such as a laptop computer, a cellular phone, or other wireless system, and may operate as a transmitter (transmit mode) or as a receiver (receive mode).

The MAC **130** includes an embedded central processing unit (CPU) **124** and a data memory **120**, such that the device ID-based distributed scheduling method **500**, some portion of which is software-based, in some embodiments, may be loaded into the memory and executed by the CPU. The depictions of FIGS. **6**A and **6**B are simplified representations of the MAC **130**, and other devices, circuits, and logic elements that may be part of the MAC are omitted.

The MAC **130** interfaces with logic devices that are commonly found in transmitters and receivers: the front-end **132**, the DAC **134**, the ADC **142**, the radio **136**, and the DSP **138**. The devices **132**, **134**, **136**, **138**, and **142** are also known herein as target modules. The target modules, as well as the logic devices within the MAC **130**, may consist of hardware, software, or a combination of hardware and software components.

The target modules are commonly found in most transmitters and receivers. A front end (FE) **132** is connected to the antenna **154**, and includes a power amplifier (PA) (for the transmitter), a low noise amplifier (LNA) (for the receiver), and an antenna switch (not shown), for switching between transmitter and receiver modes. The DAC **134** is used to convert the digital signal coming from the DSP **138** to an analog signal prior to transmission via the radio (transmitter); conversely, the ADC **142** is used to convert the analog signal coming from the radio to a digital signal before processing by the DSP **138** (receiver). At the transmitter **160**, the radio **136** transfers the signal from base-band to the carrier frequency; at the receiver **170**, the radio **136** transfers the signal from carrier frequency to base-band. At the receiver **170**, the DSP **138** demodulates the OFDM signal from the ADC **142**, for processing by the MAC **130**. At the transmitter **160**, the DSP **138** modulates the MAC data into an OFDM signal in base-band frequency, and sends the resulting signal to the DAC **134**.

A typical transmit operation occurs as follows: at the transmitter **160**, the MAC **130** sends a packet to the DSP **138**. The DSP **138** converts the packet into a digital OFDM signal and sends it to the DAC **134**. The DAC **134** converts the signal into an analog signal, and sends the signal to the radio **136**. The radio **136** modulates the base-band signal to the carrier frequency and sends the signal to the power amplifier **146** of the front-end **132**, which amplifies the signal to be suitable for over-air transmission via the antenna **154**.

At the receiver **170**, the signal is received by the antenna **154**. The weak analog signal is received into the low noise amplifier **148** of the front-end **132**, sending the amplified analog signal to the radio **136**, which filters the signal according to the selected frequency band and demodulates the carrier frequency signal into base-band. The radio **136** sends the analog signal to the ADC **142**, which converts the analog signal to a digital signal, suitable for processing by the DSP **138**. The DSP **138** demodulates the OFDM signal and converts the signal to MAC **130** packet bytes. Other operations, such as encryption and decryption of the packets, are not shown. Where the transmission is successful, the packet received by the MAC **130** in the receiver **170** is the same as the packet transmitted by the MAC **130** in the transmitter **160**.

In the MAC, the device ID-based distributed scheduling method **500** employs a new, modified distributed scheduling structure **90**, described in more detail below, that replaces the tone matrix **50**. The device ID-base distributed scheduling method **500** is implemented in software, in some embodiments, with the software being loaded into the memory **120** and executed by the embedded CPU **124**. In other embodiments, as depicted in FIG. **6**B, the transceivers **160** and **170** do not include a CPU **124** in the MAC **130**. Instead, an application-specific integrated circuit (ASIC) **190** may drive the distributed scheduling method **500** as a state machine implemented using logic registers (**192**). The ASIC solution of FIG. **6**B may be preferred over the MAC-based implementation of FIG. **6**A, for example, in systems in which low power consumption is important. The device ID-based distributed scheduling method **500** is described in more details, below.

FIG. **7** presents another illustration of the device ID-based distributed scheduling method **500**, according to some embodiments. Similar to the depiction in FIG. **1**, in a second device ID-based distributed scheduling method **500**, a data stream **60** is made up of both miscellaneous control channels **62** and traffic slots **64**. Each traffic slot **64** is made up of the

following fields: contention scheduling **66**, pilot **72**, CQI **74**, data segment **76**, and acknowledgement **78**.

A novel distributed scheduling structure **90** found in the MACs **130** of FIG. **6** is illustrated in more detail in FIG. **7**, according to some embodiments. Each traffic slot **64** includes a contention scheduling header **66** made up of the distributed scheduling structure **90**. In the contention scheduling header **66**, the tone matrix **90** consisting of two macro blocks are defined: a receiver identification block, RX ID block **92**, and a transmitter identification block, TX ID block **94**. For simplicity, the distributed scheduling structure **90** is depicted in the drawings as an orthogonal structure, similar to the tone matrix **50** (FIGS. **1-5**). FIG. **8** presents a more realistic representation of the distributed scheduling structure **90**, according to some embodiments.

The distributed scheduling structure **90** enables a potential transmitter in a wireless neighborhood to contend for a data segment **76** in the traffic slot and to effectively communicate with a potential receiver to ensure successful receipt of the data segment. The distributed scheduling structure **90** is made up of individual tones **82**. The tones **82** are populated with ON or OFF signals, allowing transmitters and receivers to communicate with one another in a wireless neighborhood. In contrast to the CID-based distributed scheduling method **100** (FIG. **1**) using the device ID-based distributed scheduling method **500** (FIG. **7**), connections between transmitters and receivers are not necessarily established, so the distributed scheduling structure **90** first establishes transmitter-receiver connections, then enables communication between the transmitter-receiver pair.

In the RX ID block **92** (framed in diagonal stripes), each tone pair is mapped to a receiver device ID (DID), rather than a CID, and in the TX ID block **94** (framed in horizontal stripes), each tone pair is mapped to a transmitter DID. In FIG. **7**, tone **82**A and tone **82**B in the RX ID block **92** constitute a single tone pair, mapped to a receiver DID. Tone **82**B may be regarded as analogous to tone **82**A, and vice-versa. Tone **82**C and tone **82**D in the TX ID block **94** also constitute a tone pair, mapped to a transmitter DID. Tone **82**C may be regarded as analogous to tone **82**D, and vice-versa.

In both the RX ID block **92** and the TX ID block **94**, there are transmit block **84** (polka-dotted), transmit block **88** (tightly polka-dotted), receive block **86** (checkerboarded), and receive block **96** (horizontally dashed), respectively, enabling the transmitter and the receiver to send both requests and responses. Thus, within the RX ID block, the first tone **82**A of the tone pair is located in the transmit block **84** while the second tone **82**B is located in the receive block **86**. Similarly, within the TX ID block **94**, the first tone **82**C of the tone pair is located in the TX block **88** while the second tone **82**D is located in the receive block **96**.

The distributed scheduling structure **90** enables a two-step scheduling operation. In a first step, the RX DID can be determined in the RX ID block. In a second step, the TX DID can be determined in the TX ID block, so that a complete scheduling can be done.

The distributed scheduling structure **90** is used to map device identifiers (DIDs) rather than CIDs, in some embodiments. This lowers the size requirement for the distributed scheduling structure **90** from N^2 (which is the size requirement for the tone matrix **50** in FIG. **1**) to N, where N is the number of users, with each user most likely having both a transmit and a receive function (e.g., transceivers). The formula for the number of tone pairs needed in the distributed scheduling structure **90** is given as follows:

$$\#\text{ of tone pairs} = 4*N \quad (2)$$

Thus, for a wireless neighborhood having eight users, the number of tone pairs needed is 32, with sixteen tones **82** being occupied in the RX ID block **92**, sixteen tones in the TX ID block **94**. Since the number of DIDs linearly increases with N instead of N^2, the contention overhead is reduced by a factor of N, in some embodiments, relative to using the CID-based distributed scheduling method **100**.

For simplicity, in FIGS. **9**, **10**, **11**A, **11**B, **12**, and **13**, the distributed scheduling structure **90** is depicted much as the tone matrix **50** of FIGS. **1-5**, that is, as a rectangular structure having contiguous tones **82** organized linearly. It is more precise, however, to think of the distributed scheduling structure **90** as a more amorphous structure, with tones **82** being physically distributed in both time and frequency.

FIG. **8** illustrates the distributed scheduling structure **90**, in some embodiments, as having both an RX ID block **92** and a TX ID block **94**, with the two blocks not necessarily being equal in size. The RX ID block **92** includes a TX block **84** and an RX block **86** consisting of tones **82**; likewise, the TX ID block **94** includes a TX block **88** and an RX block **96** consisting of tones **82**. The tones **82** making up the TX block **84** of the RX ID block **96** are not necessarily contiguous in either time or frequency, but may be spread out over a time period and frequency range. Similarly, the tones **82** making up the RX block **86**, the TX block **88**, and the RX block **96** contain tones **82** that are not contiguous over the time period and frequency range.

Thus, in some embodiments, the distributed scheduling structure **90** includes enough tones **82** to enable each transmitter and each receiver within a wireless neighborhood to be indicated by one of the tones. Although succeeding illustrations of the distributed scheduling structure **90** depict a rectangular structure, FIG. **8** provides a more realistic representation of the disorder within the structure.

For a group of D2D devices, each device is assigned a unique device ID (DID) within the group. A DID is mapped to a tone of the N tones in RX ID block **92** and TX ID block **94** as shown in FIG. **9**, according to some embodiments, where N is the number of users. In FIG. **9**, a wireless neighborhood **600** consisting of sixteen users **68**. Each user **68** is presumed to be a transceiver, having both transmit and receive functions. Nevertheless, the users **68** are depicted according to their current function. Thus, sixteen transceivers **68** are depicted as eight receivers RX_1-RX_8 and eight transmitters TX_1-TX_8.

In contrast to the prior art example above, no connections between transmitter and receiver are as yet established, nor are such connections required with the device ID-based distributed scheduling method **500**, in some embodiments. Receivers RX_1-RX_8 have associated DIDs D_{R1}-D_{R8}, respectively, while transmitters TX_1-TX_8 have associated DIDs D_{T1}-D_{T8}, respectively. Although device IDs appear to be presented in numerical order in the TX block **84** and TX block **88**, the device IDs may populate the blocks in a variety of arrangements.

FIG. **10** shows the device ID-based distributed scheduling method **500** performed using the device ID-based tone matrix **90**, according to some embodiments. In this example, assume that both the transmitter TX_4 and the transmitter TX_8 have data to send to the receiver RX_3. The transmitters first call the receiver by sending a signal on the tone **82** allocated for the receiver's identification. In these examples, D_{R3} is used as the DID for receiver RX_3 (in this example, the DID tone assignments of FIG. **9** are assumed). Here, transmitters TX_4 and TX_8 send signals in the same tone **82** for RX_3 in the TX block **84** of the RX ID block **92** to let RX_3 and other receivers know

a request has been made (step **1**). Nevertheless, only the DID for RX_3 (D_{R3}) is visible in the TX block **84** of the RX ID block **92**.

If a receiver sees that someone called its device ID, the receiver responds in an allocated tone **82**. Since the third tone **82** of the TX block **84** is used for the DID of RX_3, the third tone of the RX block **86** is likewise used for the acknowledgement by the receiver RX_3. In FIG. **10**, the receiver RX_3 responds by sending a signal as acknowledgement (ACK) in the analogous location of the RX block **86** of the RX ID block **92** (step **2**).

In essence, receiver RX_3 is asking the transmitter to send its DID in the subsequent TX ID block **94**. Where there is but a single transmitter vying for a single receiver, the two operations performed in the RX ID block **92**, namely, the transmitter requesting connection to the receiver by sending a signal on the tone **82** allocated for the receiver, and the receiver acknowledging its availability, pairs the transmitter and receiver. In some embodiments, the receiver DIDs, not the transmitter DIDs, are stored in the RX ID block **92**.

Where there are multiple transmitters calling the same receiver, as in FIG. **10**, the second step occuring in the RX ID block **92** is merely an acknowledgement of availability by the receiver. Thus, in FIG. **10**, the receiver may need to select one of the transmitters or schedule a sequence of transmissions. If the collision rate is small, this selection can be skipped. Otherwise, the contending transmitters of the same receiver may send a signal to differentiate them before sending data.

This is shown in the third step of FIG. **10**. Since both transmitters TX_4 and TX_8 see the response from the receiver RX_3, transmitters TX_4 and TX_8 send signals respectively in their allocated tones for TX_4 and TX_8 in the TX block **88** of the TX ID block **94** of the tone matrix **90**, with the DID for TX_4 being D_{T4} and the DID for TX_8 being D_{T8} (step **3**). By providing the DIDs, this third step identifies the transmitters to the receiver RX_3. This enables the receiver RX_3 to make the final selection as between transmitter TX_4 and TX_8. The receiver RX_3 selects TX_4 for connection and data transmission by putting the DID for transmitter TX_4 (D_{T4}) in the analogous location of the RX block **96** of the TX ID block **94** (step **4**). In some embodiments, the transmitter selection is based on some criteria, such as transmitter or connection priority.

For combating fading, more than one tone **82** of the tone matrix **90** is used, in some embodiments. For example, two tones **82** or four tones may be used. In some embodiments, the first goal of the device ID-based distributed scheduling method **500** is to pair a transmitter and receiver.

FIGS. **11**A and **11**B show two wireless neighborhoods **600** and **650**, respectively. In the first wireless neighborhood **600**, there are three transceivers **68** operating as transmitters (TX_1-TX_3) and there are four transceivers operating as receivers (RX_1-RX_4). Two tones, given by D_{R1a} and D_{R1b}, are mapped to the DID associated with the receiver RX_1. Similarly, receiver RX_2 has two tones mapped to its DID, given by D_{R2a} and D_{R2b}. The size of the wireless neighborhood that can be supported when two tones **82** are allocated for each device ID in the tone matrix **90** diminishes.

In FIG. **11**B, wireless neighborhood **650** includes five transceivers **68**, three operating as receivers, RX_1-RX_3, and two operating as transmitters, TX_1 and TX_2. This time, four tones **82** are allocated for each device ID. While the two-tone and four-tone solutions help to combat fading, in some embodiments, the number of transceivers **68** in the wireless neighborhoods **600**, **650** supported by the tone matrix **90** is less than using the single-tone solution.

If there are multiple transmitters requesting to send to the same receiver, the receiver RX_3 can select one of the transmitters and schedule the data segment **76** for the selected transmitter to send the data. Using the device ID-based distributed scheduling method **500**, the focus is on selecting one transmitter to send data, in some embodiments. In the final step of the operations depicted in FIG. **10**, the receiver RX_3 notifies the selected transmitter TX_4 in the RX block **96** of the TX ID block **94** by putting the TX_4 DID (D_{T4}) in the analogous tone **82** location.

For differentiating between transmitters TX_4 and TX_8, a unique tone **82** may or may not be assigned for each transmitter DID. The reason is as follows. First, the chance of multiple transmitters contending for the same receiver at the same time may be low in D2D transmissions. Second, a small number of tones can be used for each contending transmitter to select according to its ID and/or priority. As long as the collision rate of the tone selection is low enough, say, 1%, there is no need to allocate a distinct tone for each transmitter, in some embodiments.

In another example, if, during one transmission request, e.g., from transmitter TX_2 to receiver RX_7, there is another transmission request, there are two solutions, in some embodiments. The first solution adopts the rule that the called receiver always responds if ready to receive.

FIG. **12** illustrates this first solution, according to some embodiments. The transmitter TX_2 requests connection to receiver RX_7 by sending a signal on the tone **82** of the relevant TX block **84** (step **1**). Another transmitter, unknown to transmitter TX_2, requests connection to receiver RX_3 by sending a signal on the tone of the relevant TX block (step **2**).

Next, the transmitter TX_2 finds out from the RX block **86** of the RX ID block **92** that both receiver RX_3 and receiver RX_7 respond (step **3**). Further, the transmitter TX_2 learns that the received power from receivers RX_3 and RX_7 are strong. Therefore, based on the higher priority of the receiver RX_3 compared to its desired receiver RX_7, transmitter TX_2 quits further transmission to receiver RX_7 (step **4**). The transmitter TX_2 estimates its potential interference to receiver RX_3 from the receiver power and decides to give up this time request because the response of receiver RX_3 used a tone **82** with a higher priority than the response of receiver RX_7. In FIG. **12**, a dotted arrow indicates a failed (not completed) transaction, where transmitter TX_2 would have identified itself as the requesting transmitter, had the transmitter not quit (TX_2 device ID DT_2 is in italics).

The second solution is depicted in FIG. **13**, according to some embodiments. For the second solution, as before, the transmitter TX_2 requests a connection to the receiver RX_7 (step **1**). Another transmitter unknown to transmitter TX_2 requests connection to the receiver RX_3 (step **2**). This time, it is the requested receiver, rather than the requesting transmitter, that acts: the receiver RX_7 takes both the expected interference from RX_3's transmitter and the priority expressed in the RX ID block **92** into account. Although the transmitter that requested the connection to receiver RX_3 is unknown to transmitter TX_2, the receiver RX_7 is nevertheless able to calculate its expected interference relative to the desired transmission between transmitter TX_2 and receiver RX_7. Further, the receiver RX_7 knows the priority of the tones **82** in the RX ID block **92**. Based on these two information elements, the receiver RX_7 does not respond to its requesting transmitter TX_2 in the RX block of the RX ID block **92**. In FIG. **13**, a dotted arrow indicates the failed (not completed) transaction, where receiver RX_7 would have identified itself as available, had the receiver RX_7 responded (RX_7 device ID DR_7 is in italics).

By using this method, the scheduling overhead can be saved, especially when the number of devices is large. For N devices, if there is a direct link (transmitter to receiver) between any two devices, there will be 4*N tones **82** required in both the RX ID block **92** and in the TX ID block **94**, compared with 2*N*(N−1) in the prior art CID-based distributed scheduling method **100** (FIG. **1**). Table 1 shows the savings to be realized, in some embodiments.

TABLE 1

Scheduling overhead savings with the number of devices

N	# tones, prior art	# tones, proposed	savings in %
5	40	20	50%
10	180	40	78%
20	760	80	89%

For indicating priority of the transmission, one receiver may have multiple DIDs or tones **82**, as illustrated in FIGS. **11**A and **11**B. A transmitter may select a proper receiver DID from them to indicate the priority of the transmission.

While the application has been described with respect to a limited number of embodiments, those skilled in the art will appreciate numerous modifications and variations therefrom. It is intended that the appended claims cover all such modifications and variations as fall within the true spirit and scope of the invention.

We claim:

1. A transceiver capable of engaging, device-to-device, with other transceivers in a wireless neighborhood, the transceiver comprising:

a device identifier-based (DID-based) distributed scheduling structure comprising a plurality of tones, the DID-based distributed scheduling structure comprising:

a receiver (RX) identifier (ID) block, comprising tone pairs mapped to device IDs (DIDs) of transceivers operating as receivers in the wireless neighborhood, wherein the RX ID block comprises a first transmit block and a first receive block; and

a transmitter (TX) ID block comprising tone pairs mapped to the DIDs of the transceivers operating as transmitters in the wireless neighborhood, wherein the TX ID block comprises a second transmit block and a second receive block; and

a medium access controller (MAC) to:

transmit a signal on a tone of the first transmit block of the DID-based distributed scheduling structure;

receive an acknowledgement signal on an analogous tone of the first receive block;

transmit a second signal on a second tone of the second transmit block, wherein the second tone identifies the transceiver to a receiver; and

transmit data to the receiver in response to receiving a second acknowledgement signal on a second analogous tone of the second receive block;

wherein a connection identifier specifying a connection between the transceiver and the receiver is not used during the transmission of the signal, the second signal, the acknowledgement signal, and the second acknowledgment signal;

wherein the first transmit block, the first receive block, the second transmit block, and the second receive block each comprise a predetermined number of tones and one or more tones in the first transmit block of the RX ID block and one or more analogous tones in the first receive block of the RX ID block map to a distinct receiver DID;

wherein two or more tones in the first transmit block of the RX ID block and two or more analogous tones in the first receive block of the RX ID block map to a distinct receiver DID.

2. The transceiver of claim **1**, wherein the tone and the analogous tone comprise a first tone pair in the RX ID block.

3. The transceiver of claim **2**, wherein the first tone pair is mapped to the DID of the receiver.

4. The transceiver of claim **1**, wherein the MAC further comprises a software program executed by a central processing unit.

5. The transceiver of claim **1**, wherein the MAC further comprises an application-specific integrated circuit driving a state machine implemented using logic registers.

6. The transceiver of claim **1**, wherein the distributed scheduling structure is part of a contention scheduling field of a traffic slot of a data stream.

7. The transceiver of claim **1**, wherein two tones in the first transmit block of the RX ID block and two analogous tones in the first receive block of the RX ID block map to a distinct receiver DID.

8. The transceiver of claim **1**, wherein four tones in the first transmit block of the RX ID block and four analogous tones in the first receive block of the RX ID block map to a distinct receiver DID.

9. A distributed scheduling method for device-to-device (D2D) transmissions between transceivers in a wireless neighborhood, the method comprising:

transmitting, by a transceiver operating as a requesting transmitter, a signal on a tone of a first section of a distributed scheduling structure, the distributed scheduling structure comprising a plurality of tones allocated into four distinct sections;

transmitting, by the transceiver operating as the requesting transmitter, a second signal on a second tone of a second section of the distributed scheduling structure in response to having received an acknowledgement signal on an analogous tone of a third section of the distributed scheduling structure; and

sending data, by the requesting transmitter, to a receiver in response to receiving a second acknowledgement signal on a second analogous tone of a fourth section of the distributed scheduling structure, wherein the second tone and the second analogous tone comprise a second tone pair;

obtaining, by the requesting transmitter, a priority of a receiver (RX) device ID (DID) to which the acknowledgement signal is mapped;

comparing, by the requesting transmitter, the priority to a second priority of a second RX DID, wherein a third tone mapped to the second RX DID is located in the third section of the distributed scheduling structure; and

declining, by the requesting transmitter, to further communicate with the receiver, based on the second RX DID having a higher priority than the RX DID;

wherein the tone and the analogous tone comprise a first tone pair and the second tone identifies the requesting transmitter to a receiver;

wherein a connection identifier between the requesting transmitter and the receiver is not used during the transmission of the signal, the second signal, the acknowledgment signal, and the second acknowledgement signal;

wherein two or more tones in the first section and two or more analogous tones in the third section of the distributed scheduling structure are mapped to a distinct receiver DID.

10. The method of claim 9, wherein the first section comprises a transmit (TX) block of a receiver (RX) identifier (ID) block of the distributed scheduling structure.

11. The method of claim 9, wherein the second section comprises a TX block of a TX ID block of the distributed scheduling structure.

12. The method of claim 10, wherein the third section comprises a RX block of the RX ID block of the distributed scheduling structure.

13. The method of claim 11, wherein the fourth section comprises a RX block of the TX ID block of the distributed scheduling structure.

14. A distributed scheduling method for device-to-device (D2D) transmissions between transceivers in a wireless neighborhood, the method comprising:

receiving a signal on a tone of a transmit (TX) block of a receiver (RX) identifier (ID) block of a distributed scheduling structure corresponding to a device ID (DID) of a requested receiver, the distributed scheduling structure comprising both the RX ID block and a transmit (TX) ID block, the RX ID block comprising the TX block and a RX block, each of the TX ID block and the RX ID block comprising a plurality of tones, wherein one or more tones in the TX block of the RX ID block map to a distinct transceiver DID;

receiving a second signal on a second tone of the TX block of the RX ID block of the distributed scheduling structure corresponding to a second DID of a second receiver; and

declining, by the requested receiver, to respond to a transmission request, based on the DID of the requested receiver having a lower priority than the second DID of the second receiver;

wherein the signal and the second signal are transmitted without using a connection identifier between a requesting transmitter and the second receiver;

wherein two or more tones in the TX block of the RX ID block and two or more analogous tones in the RX block of the RX ID block map to a distinct receiver DID.

15. The distributed scheduling method of claim 14, wherein two tones in the TX block of the RX ID block map to a distinct receiver DID.

16. The distributed scheduling method of claim 14, wherein four tones in the TX block of the RX ID block map to a distinct receiver DID.

* * * * *